NOTES:
PRECAST CONCRETE MANHOLE (<450mm DIA)
STD-WW-10

1. ALL DIMENSIONS ARE IN MILLIMETERS (mm) UNLESS NOTED OTHERWISE.
2. PRECAST MANHOLES UNITS; COMPLYING WITH REQUIREMENTS OF IS EN 1917 AND BS 5911-PART 3.
3. THICKER MANHOLE BASE REQUIRED FOR SEWERS IN EXCESS OF 3m DEEP WHERE THE SIZE IS GREATER THAN THE STANDARD MINIMUM SIZE
4. APPROVED PRE-CAST CONCRETE BASES MAY BE USED INCORPORATING CHANNELS, BENCHING ETC. SUBJECT TO IRISH WATER APPROVAL AND COMPLYING WITH BS 5911-PART 42002.
5. STRUCTURAL DESIGN AND REINFORCEMENT DETAILS TO BE PROVIDED BY THE DEVELOPER AND SUBMITTED TO IRISH WATER FOR REVIEW.
6. MANHOLES GREATER THAN 3m IN DEPTH WILL REQUIRE A DETAILED STRUCTURAL DESIGN AND BE SUBJECT TO IRISH WATER APPROVAL.
7. MANHOLE ROOFS SHOULD CONSIST OF RE-INFORCED CONCRETE SLAB OF IN-SITU CONCRETE, C30/37, WITH A MINIMUM THICKNESS OF 225mm DESIGNED TO CARRY ALL LIVE AND DEAD LOADS, ALTERNATIVELY APPROVED PRE-CAST CONCRETE ROOF SLABS MAY BE USED SUBJECT TO IRISH WATER APPROVAL AND COMPLIANCE WITH BS 5911 PART 4; 2002.
8. COVER AND FRAMES SHALL BE SUITABLE FOR ROAD AND TRAFFIC CONDITIONS SUBJECT TO APPROVAL FROM IRISH WATER.
9. 200mm ALL AROUND, 100mm DEEP CONCRETE PLINTH WITH PROTECTIVE STAINLESS STEEL METAL BAND AROUND COVERS IN GREEN AREAS.
10. ALL CHAMBERS TO BE CHECKED FOR UPLIFT BY THE DEVELOPER BASED ON GROUND CONDITIONS WITHIN THE SITE. SHOULD ANTI FLOATATION MEASURES BE REQUIRED THEY SHALL BE SUBJECTED TO APPROVAL FROM IRISH WATER.
11. ALL CONCRETE TO BE IN ACCORDANCE WITH IS EN 206; 2013.

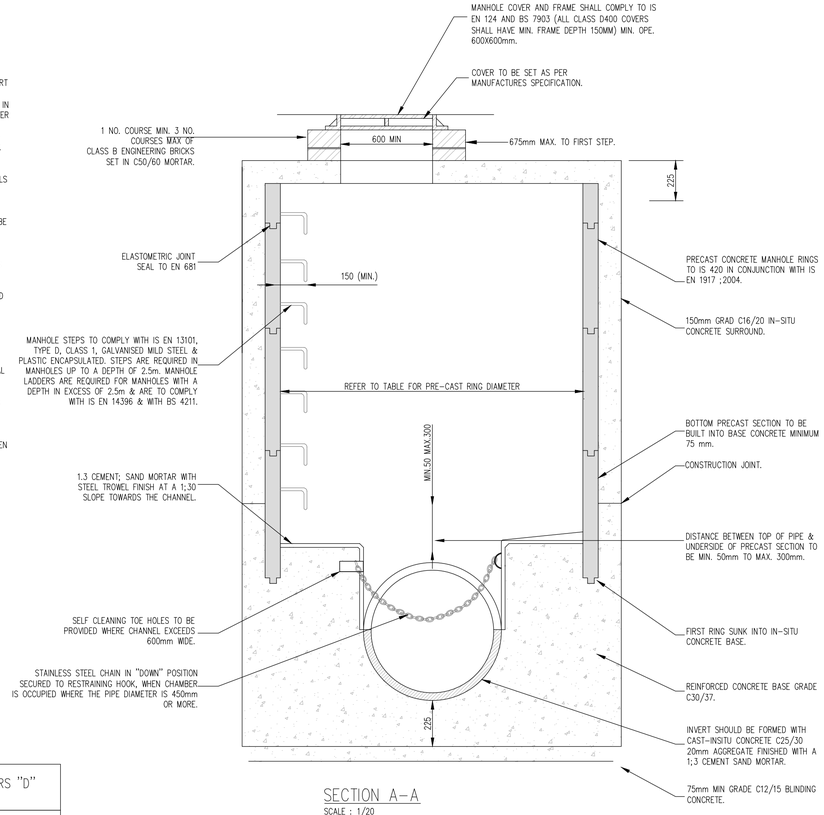

SECTION A-A
SCALE : 1/20

MINIMUM MANHOLE DIAMETERS "D"	
DIAMETER OF LARGEST PIPE IN MANHOLE (mm)	INTERNAL DIAMETER OF MANHOLE (mm)
LESS THAN 375	1200
375 TO 450	1350
500 TO 750	1500

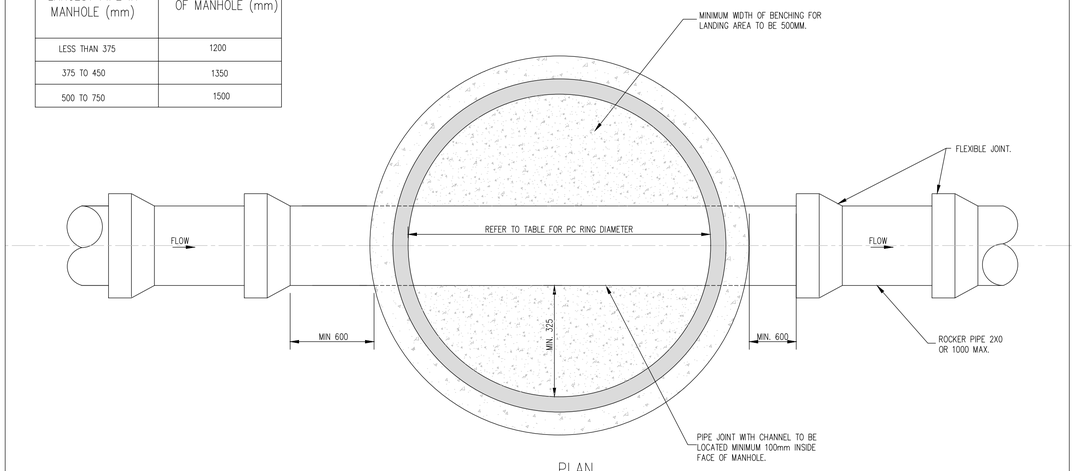

PLAN
SCALE : 1/20

LAST FOUL MANHOLE TO IRISH WATER SPECIFICATIONS (STD-WW-10)
SCALE : 1/20

MANHOLE DETAILS FOR PIPE DIAM'S. 225, 300, 375, 450.
DEPTH OF INVERT LEVEL LESS THAN 1.0M – 3.0M

TYPE B MANHOLE

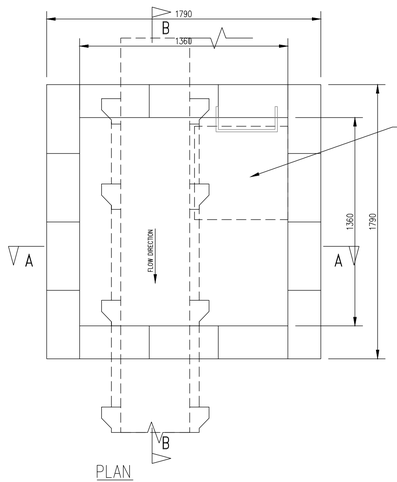

PLAN
SCALE : 1/20

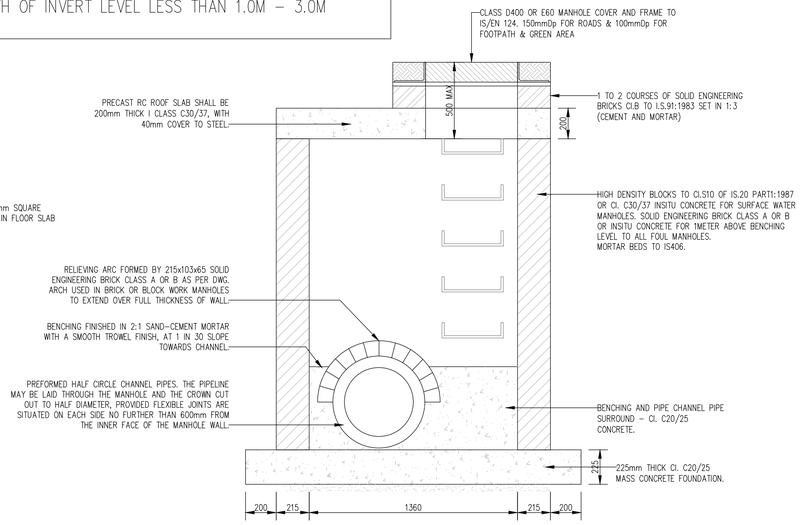

SECTION A-A
SCALE : 1/20

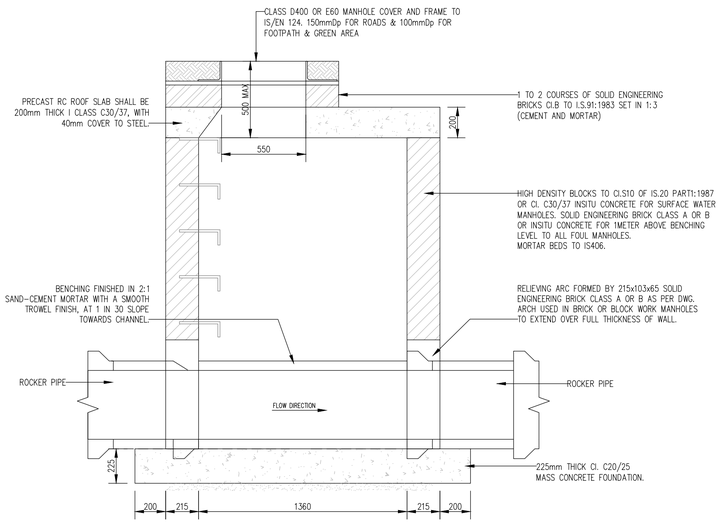

SECTION B-B
SCALE : 1/20

NOTES :

1) BRANCH MANHOLES : MANHOLE WIDTH INCREASED BY 300mm ON THE SIDE OF THE BRANCH FOR PIPE DIAMETERS LESS THAN 450ø AND 500mm FOR PIPE DIAMETER GREATER THAN 450ø

2) ALL MANHOLES ARE TO BE CONSTRUCTED IN MASS CONCRETE, C30/37 UNLESS PREVIOUSLY AGREED WITH CONSULTING ENGINEER.

3) PRIOR TO LAYING OF PIPES, MANHOLE FLOORS WILL BE PLACED AND PIPES LAID CONTINUOUSLY THROUGH MANHOLES.

4) MIN. COVER TO SURFACE WATER AND FOUL SEWER PIPES
ROADS: 1.2m TO TOP OF PIPE
DRIVEWAYS & ACCESS: 1.2m
FIELDS/FOOTPATHS 0.9m
IF NOT THEN PIPES SHALL BE SURROUNDED IN 150mm CONCRETE 20N/mm² INSITU CONCRETE TO BE USED

5) ALL MANHOLE COVERS IN FIELDS/GRASS MARGINS ETC. ARE TO HAVE 200mm WIDE x 150mm DEEP MOWING KERB, STEEL TROWELLED FINISH, CONC. SURROUND.

6) AN APPROVED EPOXY MORTAR (E.G. RESIFIX NO. 1;S.B.D CORTITE MORTAR : LOCKSET 'D' OR SIMILAR) IS TO BE USED WHEN FIXING MANHOLE RUNGS/STEP IRONS AFTER CONSTRUCTION OF THE WALLS. THE CONCRETE IS TO BE DRY, HOLE TOLERANCES TO BE APPROX. 5/10mm ALL ROUND AND CLEANED OUT WITH COMPRESSED AIR AND ALL MANUFACTURER'S RECOMMENDATIONS ARE TO BE FOLLOWED.

7) WHERE MANHOLE IS IN CARRIAGEWAY PROVIDE 450mm MIN. COVER BETWEEN ROAD SURFACE AND ROOF SLAB AND USE ENGINEERING BRICK CLASS 'B' TO I.S. 91 1974 IN SHAFT.

8) ALL MANHOLE COVERS & FRAMES TO CLASS D400 AND TO COMPLY WITH IS/EN 124 REQUIREMENTS FOR LOAD CLASS & SPECIFICATION.

9) REFER TO DUBLIN CITY COUNCILS STANDARD MANHOLE DETAILS FOR FULL DETAILS OF MANHOLES.

MANHOLE DIMENSIONS

DEPTH TO INVERT	PIPE DIA	L	B
1.0 – 3.0	225	1360	1360

LAST SURFACE WATER MANHOLE TO DCC SPECIFICATIONS
SCALE : 1/20

PLANNING DRAWING.
NOT FOR CONSTRUCTION.
ALL LEVELS GIVEN ARE
RELATIVE TO ORDNANCE DATUM.
THIS DRAWING HAS BEEN ISSUED FOR INFORMATION PURPOSES ONLY AND MUST NOT BE USED FOR CONSTRUCTION UNDER ANY CIRCUMSTANCES

NOTES
1. For setting out refer to Architect's drawings.
2. This drawing to be read in conjunction with all other Architectural and Engineering drawings and all other relevant drawings and Specifications.
3. DO NOT SCALE THIS DRAWING. Use figured dimensions only.
4. No part of this document may be reproduced or transmitted in any form or stored in any retrieval system of any nature without the written permission as copyright holder except as agreed for use on the project for which the document was originally issued.
5. Ordnance Survey Ireland Licence Number EN 0074021

Rev. No.	Date	REVISION NOTE	Drn. By	Chkd. By

Architect	Henry J Lyons		
Project	Waterfront South Central SHD		
Title	Manhole Details		
Drn by DD	Chkd by RFM	Aprvd by RFM	Dwg. No. R064-204 / Revision
Date Jan. 2021	Scale AS SHOWN @ A1		

CS Consulting Group
DUBLIN | LONDON | LIMERICK
Head Office
19-22 Dame Street, Dublin 2.
T: +353 (0)1 5480863 F: +353 (0)1 9011355
e: info@csconsulting.ie
w: www.csconsulting.ie

NSAI Certified
Quality I.S. EN ISO 9001:2008
Environment I.S. EN ISO 14001:2004
Energy I.S. EN ISO 50001:2011
Health & Safety OHSAS 18001:2007